INS12280A - 6/01

MOEN® 摩恩

厨房挂件

文中图片仅供参考
(款式因型号而异)

如需安装支持，配件丢失等，请联系MOEN。
(中国) 400-630-8866
www.moen.cn

©2023 Moen Incorporated

注意事项：

MOEN® 摩恩 卫浴产品以精湛的技术制造而成，保证品质优良，美观耐用。
清洁产品时须小心，避免对产品表面造成损害。
请用清水或中性的清洁剂清洁产品表面，然后以柔软的毛巾抹干；

切勿使用含化学成分或腐蚀性的清洁剂、粗糙的布料抹擦。

建议定期清洗产品，以保证其外观光洁明亮。
使用酸性清洁剂清洗附近物品时，有可能损害产品表面，请加倍小心。

挂杆安装步骤：

1. 在安装位置根据产品的尺寸，打1组ϕ6，深40mm的孔。
2. 将膨胀胶打入孔中，端面与墙面齐平。
3. 用膨胀螺钉将底座锁紧到安装位置。
4. 将挂杆安装在自攻螺丝上，如挂杆松紧不合适，或不能安装需微调自攻螺丝，调节至挂杆松紧合适,不影响安全使用。

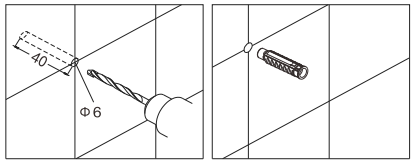

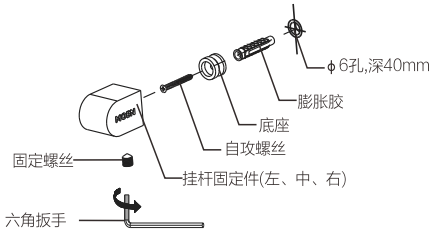

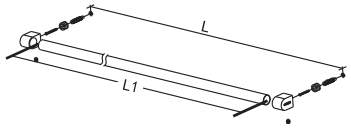

挂杆:
KAC0271(L=387±3;L1=400mm)
KAC0272(L=587±3;L1=600mm)
KAC0273(L=787±3;L1=800mm)

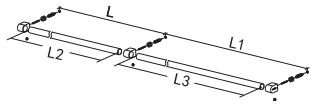

挂杆:
KAC0274(L=387±3;L1=587mm;
L2=400mm;L3=600mm)
KAC0275(L=587±3;L1=587mm;
L2=600mm;L3=600mm)
KAC0276(L=587±3;L1=787mm;
L2=600mm;L3=800mm)

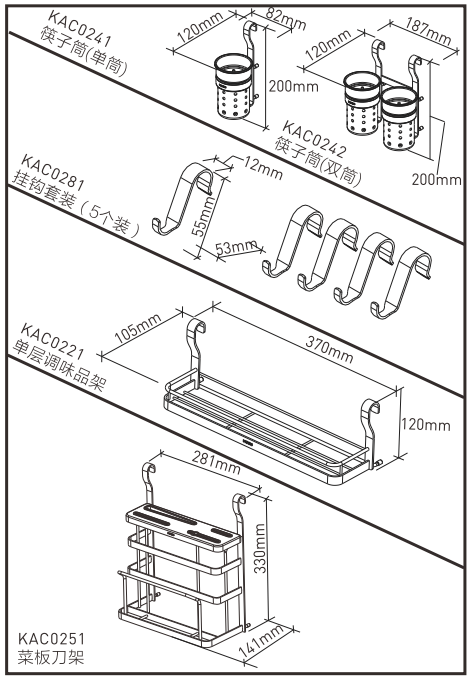

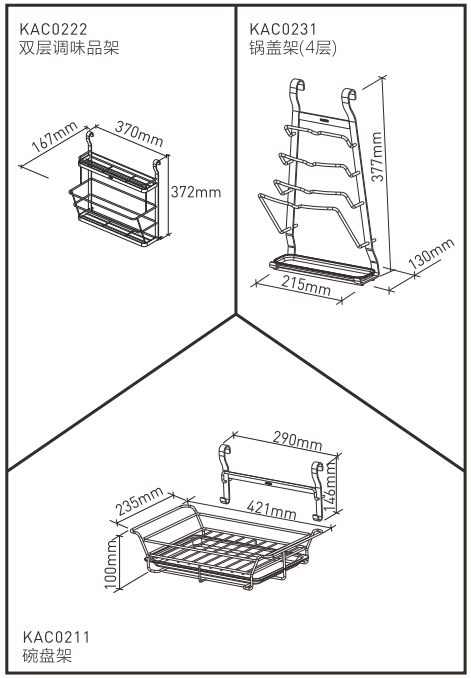

产品售后保修条款

摩恩产品是在高质量标准及生产工艺下制造的，摩恩承诺为消费者购买的洁具产品提供有期限免费保修及终身维修服务。
浴室和厨房挂件免费保修期为1年，均自消费者购买日（以摩恩产品分销商开具的发票或收据上载明日期为准）起计。
免费保修范围为产品及产品配件由于材质及工艺原因而造成的故障或损坏。免费保修期内，我们将无偿为您提供修理服务及更换发生故障的产品或产品配件。摩恩的售后服务责任仅限于对故障产品的修理，而不延及您因产品故障而发生的其他损失，法律另有规定的除外。
您需了解：产品外观碰伤、刻划痕迹，以及滥用及不正当保养所导致的故障或损坏，均不属于免费保修范围。即使在免费保修期内，属下列（1）–（5）情况之一的，需酌情收取修理费用：
1.不能出示相符的保修卡和有效购买凭证情况的，
2.未按使用说明书告知的使用方法和注意事项造成的故障，
3.自行拆卸、维修、改装所造成的故障和损坏，
4.由于不可抗力等外部原因引起的故障和损坏，
5.由于运输、搬卸、挤压等造成的损坏。

对于保修期外或不在保修范围内的产品，如需维修，摩恩将酌情收取上门费、人工费及材料费。
本保修条款仅对原始消费者和酒店行业的购买者有效，并不适用于本产品在工业，商业，贸易和非酒店行业的使用。
如对本保修条款内容有任何疑问，请拨打400 630 8866 咨询热线，或向当地分销商咨询。

MOEN® 摩恩

合 格 证
Compliance Certification

产品名称 Product Name: 厨房挂件 Kitchen Accessories
检验员 Inspector
生产日期 Date of Production

富俊汇赢科技（上海）有限公司
中国（上海）自由贸易试验区新杨公路
1800弄1号4幢207室
邮编：201413

Fortune Brands Innovations (Shanghai) Co., Ltd
Room 207, Building 4, No.1, Lane 1800, Xinyang Highway,
China (Shanghai) Pilot Free Trade Zone

06/08/2015 INS12280A
Released 00

INS12280A - 6/01

MOEN® 摩恩

Kitchen Accessories

The images in the document are for reference only
(Style varies by model)

PLEASE CONTACT MOEN FIRST
For Installation Help,Missing or Replacement Parts
(China) 400–630–8866
www.moen.cn

©2023 Moen Incorporated

CAUTIONS:

MOEN® 摩恩 Bathroom products are made with superb technology to ensure high quality, beautiful and durable.

Be careful when cleaning the product to avoid damage to the surface of the product.

Please clean the surface of the product with water or neutral detergent, and then dry it with a soft towel;

Do not use chemical or corrosive cleaners or rough cloths.

It is recommended to clean the product regularly to ensure its appearance is bright and clean.

When using acidic cleaners to clean nearby items, it may damage the surface of the product. Please be extra careful.

Installation Instructions:

1.According the size of products, drill holes of Φ 6 mm, deep 40mm in the position of installation.

2.Put anchoring into holes, make sure it's flat between the end face of anchoring and wall.

3.Lock the back base to position of installation with screw.

4. Install the hanger on the screw, and adjust the screw until the hanger is properly tightened.

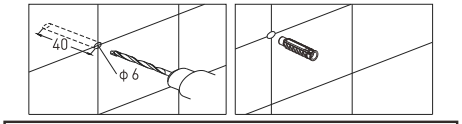

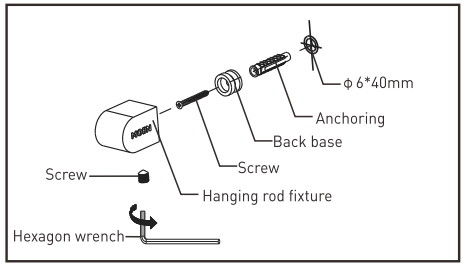

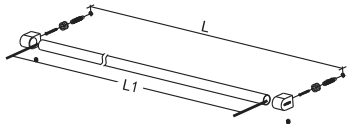

BAR:
KAC0271(L=387±3;L1=400mm)
KAC0272(L=587±3;L1=600mm)
KAC0273(L=787±3;L1=800mm)

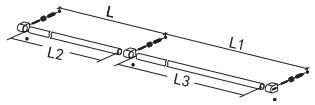

KITCHEN ACC BAR:
KAC0274(L=387±3;L1=587mm;
L2=400mm;L3=600mm)
KAC0275(L=587±3;L1=587mm;
L2=600mm;L3=600mm)
KAC0276(L=587±3;L1=787mm;
L2=600mm;L3=800mm)

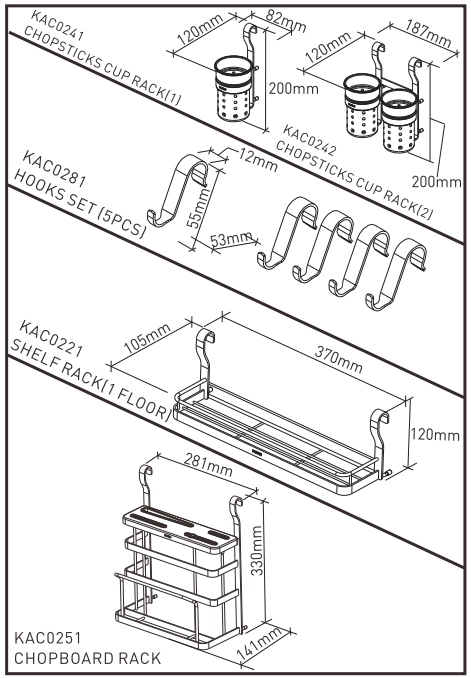

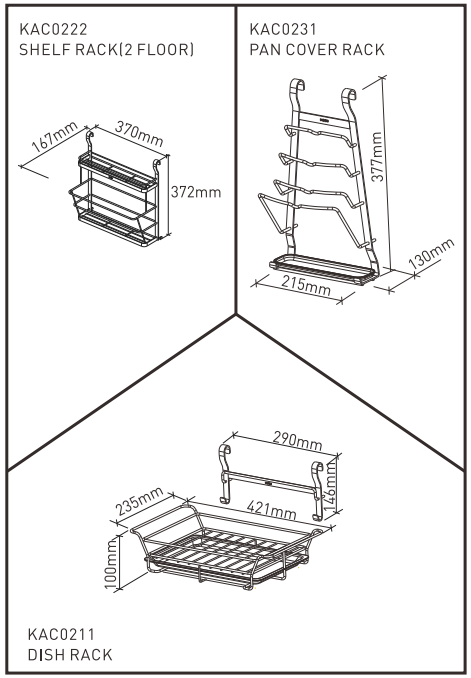

MOEN LIMITED WARRANTY

We offer limited warranty and lifetime maintenance for Moen products, which are all manufactured with high standards of workmanship.

The period of warranty shall start from the date of purchase of the product (according to the invoice or receipt issued by Moen distributors) and shall cover a period of the following: the warranty period for **Kitchen Accessory is 1 year.**

This warranty is your coverage against material and workmanship malfunction or defects in Moen products or components. During the warranty period, we offer free maintenance and changing of malfunctioned products or product components. Moen's after sales service liability is limited to the maintenance of faulty items and does not cover your other losses caused by product malfunction, except for otherwise stipulated by law.

Cosmetic damages (scratches, dents, etc.) and malfunction or defects caused by abuse or improper maintenance is not covered by this warranty.

Although the warranty period remains valid, in case of the following conditions (1) - (5), the maintenance cost (material cost and labor cost) shall still be charged as the case may be:

1. Corresponding warranty card and valid invoice cannot be presented;
2. Faults were caused by the incompliance with the instructions and precautions provided in the user's manual;
3. Damages and faults were caused by self-actuated dismantling, repair and refit;
4. Faults and damages were caused by external factors such as force majeure;
5. Damages were cau sed by transportation, unloading and extrusion, etc.

This warranty is valid for the original consumers only (including hotel use), and excludes industrial and commercial use of the product (except for hotel use). This card is only responsible for product maintenance rather than any other liabilities.

In the event that the product requires maintenance but exceeds the warranty period, or that the product is not covered by this warranty, labor cost and material cost shall be charged as thecase may be.

Please call 400-630-8866 or contact local dealer for any question.

MOEN® 摩恩

合 格 证
Compliance Certification

厨房挂件
产品名称 Product Name Kitchen Accessories
检验员 Inspector
生产日期 Date of Production

富俊汇赢科技（上海）有限公司
中国（上海）自由贸易试验区新杨公路
1800弄1号4幢207室
邮编：201413
Fortune Brands Innovations (Shanghai) Co., Ltd
Room 207, Building 4, No.1, Lane 1800, Xinyang Highway,
China (Shanghai) Pilot Free Trade Zone

06/06/2023 INS12280A
Released 06