MOEN® 摩恩

Specifications

DESCRIPTION

- Metal construction with various finishes identified by suffix
- 600mm Flexible supplies with G1/2 inlet connections

OPERATION

- Temperature controlled through 100 degree arc of handle travel
- Pull-on / Push-off
- Lever style handle

FLOW

- Water flowrate about 3.0 L/min to 4.5 L/min at 0.1Mpa
- Water flow difference is limited to 3.0 L/min maximum from 0.1 Mpa to 0.3 Mpa

CARTRIDGE

- MOEN Duralast cartridge

STANDARD

- Designed to meet GB 18145; GB 25501

WARRANTY

- 5 years limited warranty against leaks and drips

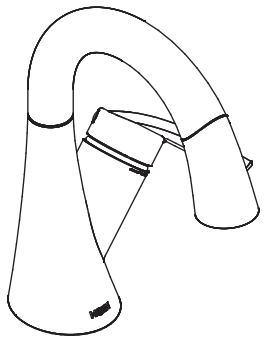

Single Mount One-Handle Lavatory Faucet

Models:GN59121 Series

NOTE: THIS FAUCET IS DESIGNED TO BE INSTALLED THRU 35mm MIN. To 37mm Max.DIA.HOLE

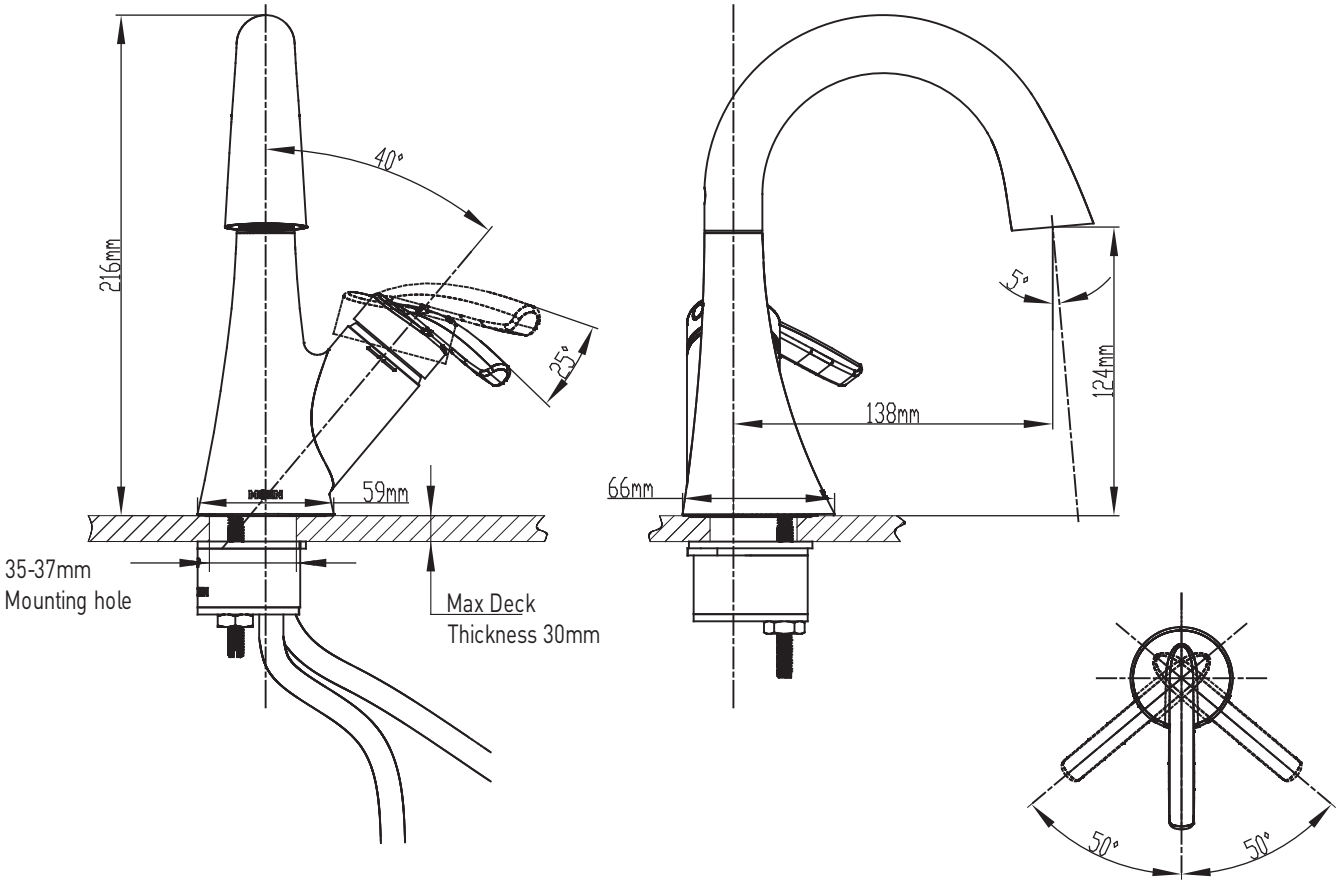

CRITICAL DIMENSIONS DO NOT SCALE

©2021 Moen Incorporated

400-630-8866
www.moen.cn

12/02/2021 GN59121SP 500000007409
Released 00