MOEN® 摩恩

Specifications

DESCRIPTION

- Various finishes identified by suffix
- Reflex™ pulldown system offers smoother operation, easy movement and secure docking
- 3-function wand technology provides the maneuverability for cleaning or rinsing
- Waterfall mode provides a powerfully concentrated rinse for faster clean up and less splash
- G1/2 inlet connections
- 600mm flexible supply lines with G1/2" compression fittings
- Pulldown spray with 1350mm braided hose
- High arc spout provides height and reach to fill or clean large pots while pulldown wand provides the maneuverability for cleaning or rinsing
- 360° rotating spout provides ability to install handle on either side

OPERATION

- Lever style handle, temperature controlled by 100° arc of handle travel
- Operates in stream or spray mode in the pulldown or retracted position

FLOW

- Stream water flowrate is about 3.0 L/min to 4.5 L /min at 0.1 Mpa
- Water flow difference is limited to 3.0 L/min maximum from 0.1 Mpa to 0.3 Mpa

CARTRIDGE

- MOEN Duralast cartridge

STANDARDS

- Designed to meet GB 18145; GB 25501

WARRANTY

- 5 years limited warranty against leaks and drips

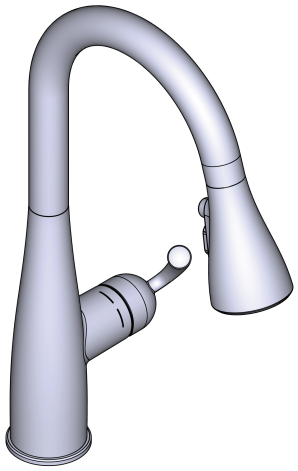

Essie

One-Handle Pulldown Kitchen Faucet

MODELS : GNMCL87014DP series

NOTE:THIS FAUCET IS DESIGNED TO BE INSTALLED THRU 34mm MIN. TO 38mm MAX.DIA.HOLE

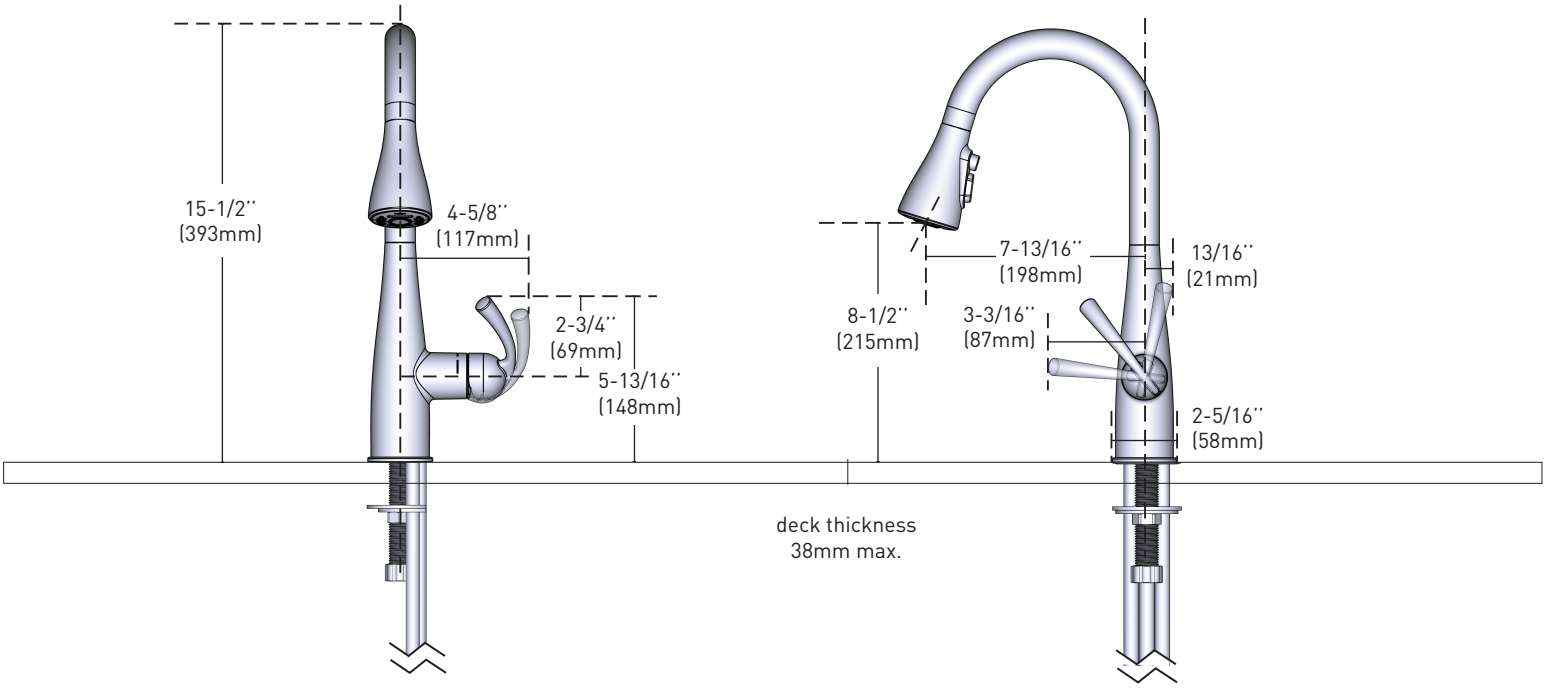

CRITICAL DIMENSIONS DO NOT SCALE

©2022 Moen Incorporated

400-630-8866
www.moen.cn