MOEN® 摩恩®

SPECIFICATIONS

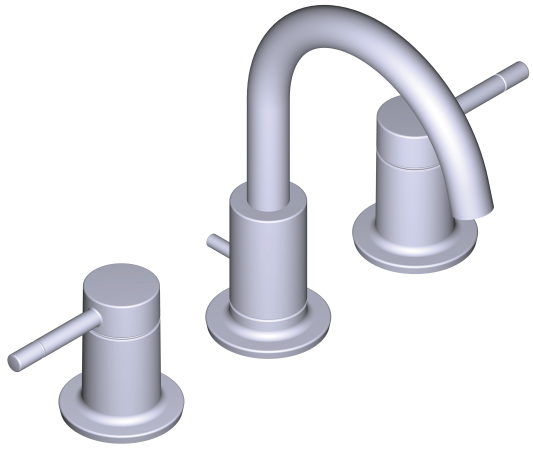

DESCRIPTION
- Metal construction with various finishes identified by suffix

OPERATION
- Lever style handles
- Maximum handle rotation angle is 90˚ to full on for either handle
- Rotate hot side handle counterclockwise to open (clockwise to close)
- Rotate cold side handle clockwise to open and (counterclockwise to close)

FLOW
- Aerator is limited to 1.5 gpm max (5.7 L/min)

STANDARDS
- Designed to meet GB18145

WARRANTY
- 5 years limited warranty against leaks and drips

LUCERNE

Two Handle Widespread Lavatory Faucet Trim

MODELS: GNT69228 Series
VALVE: 9000MCL Series



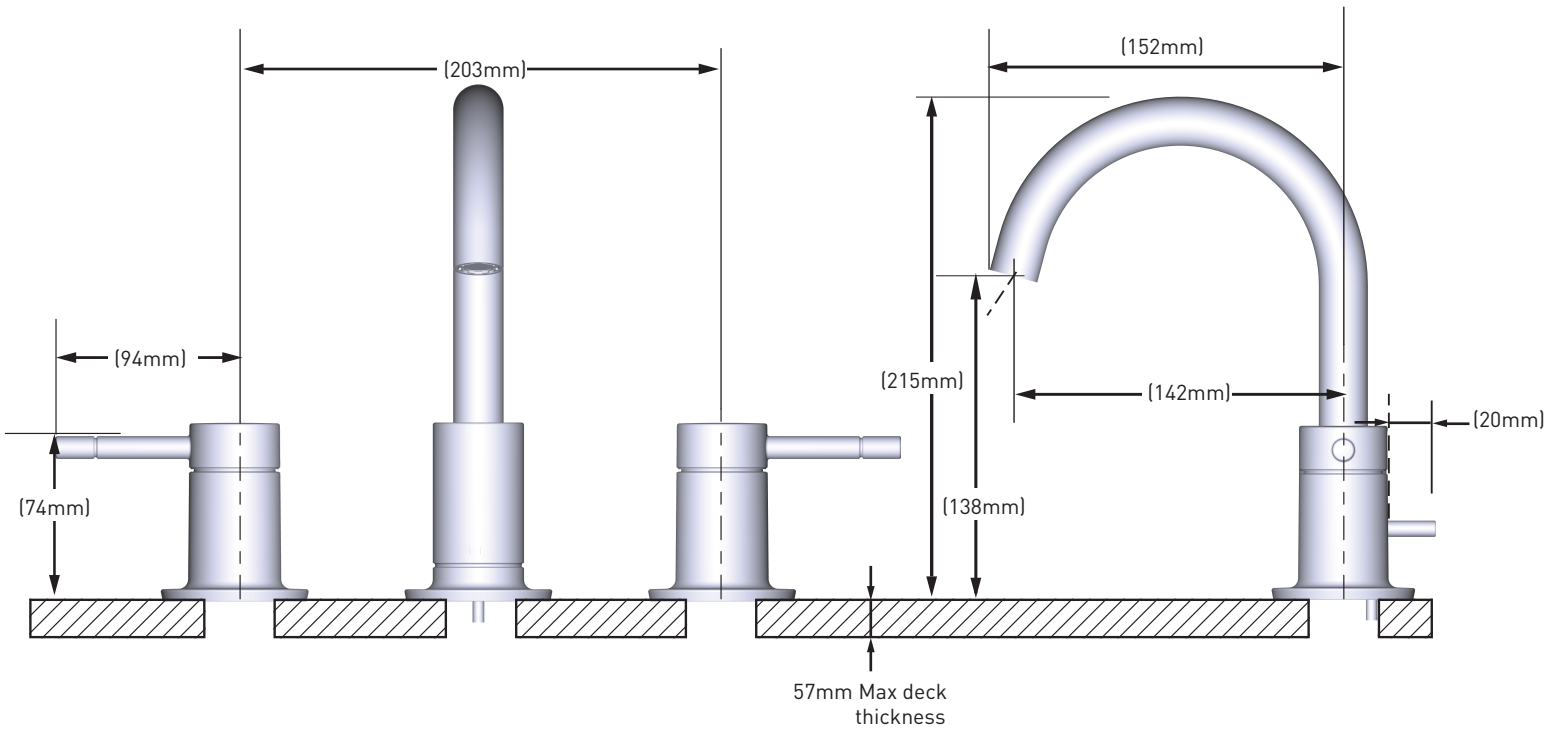

©2025 Fortune Brands Innovations Incorporated

For consumers in markets outside the Chinese mainland, please consult the local dealer
TO ORDER PARTS CALL: (Chinese Mainland) 400-630-8866
(Chinese Mainland) www.moen.cn
(Outside Chinese Mainland) www.moen.com.hk

01/04/2026 SPC23076 50000516164
Released 00