MOEN® 摩恩

Specifications

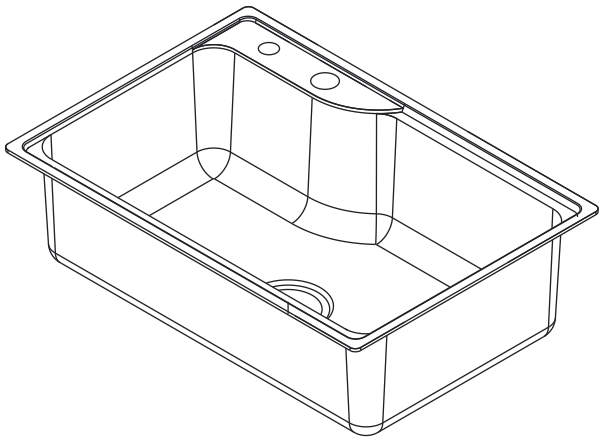

DESCRIPTION
- Stainless steel double bowl sink
- SS.304 construction, thickness, 1.0mm, Brush
- Configure with #10*2+SB021 drainage
- Top mounting, mounting hardware included
  cutout size: 726mmX411mmXR23mm
- Sounds Shield system

STANDARD
- Comply with QB/T 4013-2010

WARRANTY
- 5 years limited warranty against leaks and drips
- 1 year limited warranty for sink accessories

Stainless Steel Double Bowl Sink

MODELS : MCL314MCL750

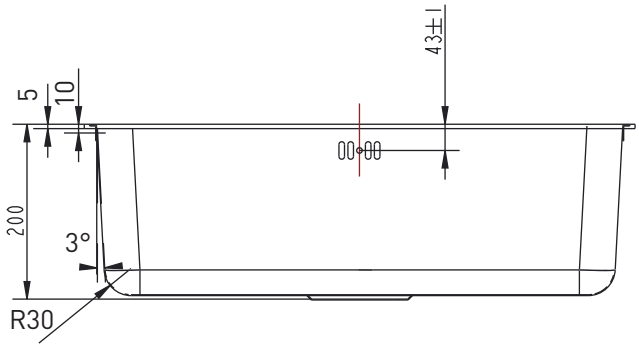

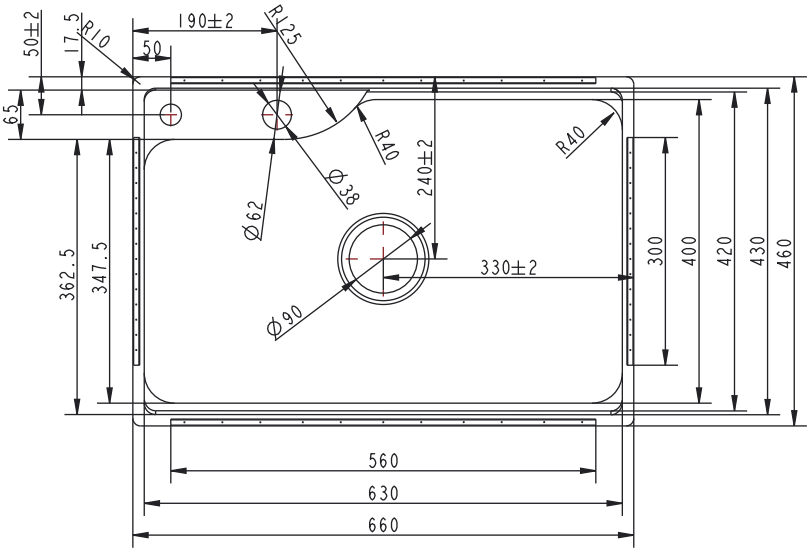

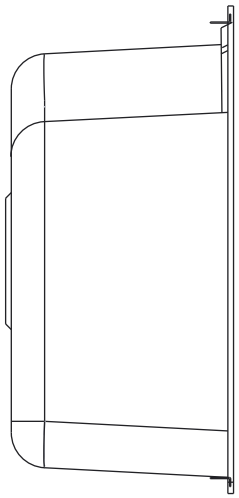

CRITICAL DIMENSIONS DO NOT SCALE

©2021 Moen Incorporated

400-630-8866
www.moen.cn

06/24/2021 SPC21542 S0000A5728
Release@100