MOEN

Specifications

DESCRIPTION
- Metal construction with chrome finish
- Designed to be installed through 3 holes, 1-3/8"(35mm) Dia., 8"(203.2mm)on center

OPERATION
- Maximum handle rotation angle is 90 to full on for either handle clockwise to close
- Rotate hot side handle counterclockwise to open and clockwise to close
- Rotate cold side handle clockwise to open and counter-clockwise to close

CARTRIDGE
- 1224 cartridge design with nonmetallic/nonferrous and stainless steel materials

STANDARD
- Designed to meet GB 18145

WARRANTY
- 5years limited warranty against leaks and drips

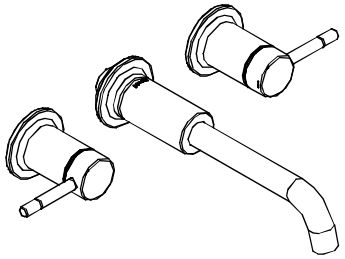

Lucerne
Trim For Two-Handle Wall Mount LavatoryFaucet
Models: GNT69128

Unit : mm

Suggest To Match With Moen GNMCL9700 or Any Other Moen Propositional Product.

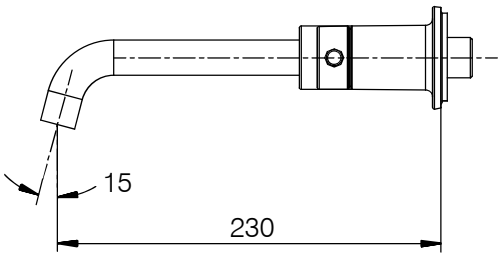

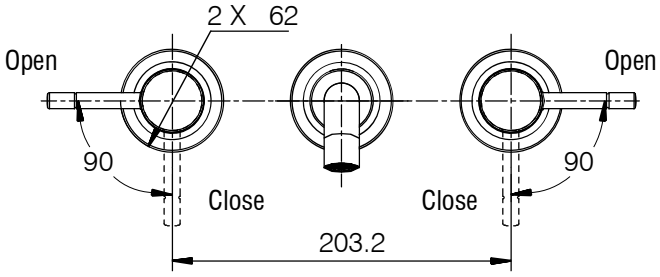

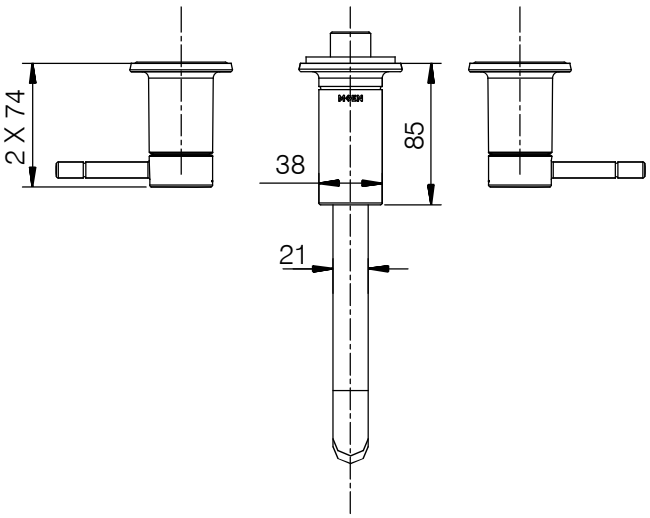

CRITICAL DIMENSION
(DO NOT SCALE)