MOEN® 摩恩

Specifications
规格书

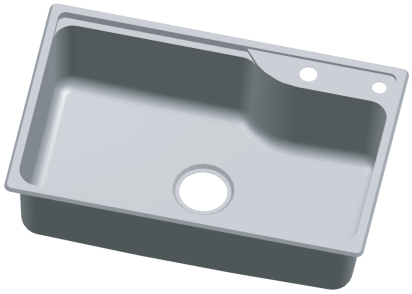

海逸/HAWAII
不锈钢单槽
Stainless Steel Single Bowl Sink

产品描述
- 不锈钢单槽
- 304不锈结构钢，厚度0.8mm
- 台上或台下安装方式，配安装五金件
  台上开孔尺寸： 618mm X 418mm X R20mm
  台下开孔尺寸： 600mm X 400mm X 2R40mm XR16
- 消音处理

标准
- 符合GB/T 38474-2020

质保期
- 水槽本体有限质保5年
- 水槽配件有限质保1年

DESCRIPTION
- Stainless steel single bowl sink
- SS.304 construction, thickness, 0.8mm
- Top or under mounting, mounting hardware included
  Opening size of basin on table: 618mm X 418mm X R20mm
  Opening size of basin under platform: 600mm X 400mm X 2R40mm X 2R16
- Sounds Shield system

STANDARD
- Comply with GB/T 38474-2020

WARRANTY
- 5 years limited warranty for sink body
- 1 year limited warranty for sink accessories

型号/SKU	落水头/Drainer	排水管/Pipe	预留孔/Reserved Hole	表面颜色/Moen Color
SK62311A	SB10	SB012R	Ø28	丝光/Brush
SK62311D	SB50	SB033	Ø28	丝光/Brush
SK62311	N/A	N/A	Ø28	丝光/Brush
SKP62311	N/A	N/A	Ø28	丝光/Brush
SK62312A	SB10	SB012R	Ø28	亚光/Satin
SK62312D	SB50	SB033	Ø28	亚光/Satin
SK62312	N/A	N/A	Ø28	亚光/Satin
SKP62312	N/A	N/A	Ø28	亚光/Satin

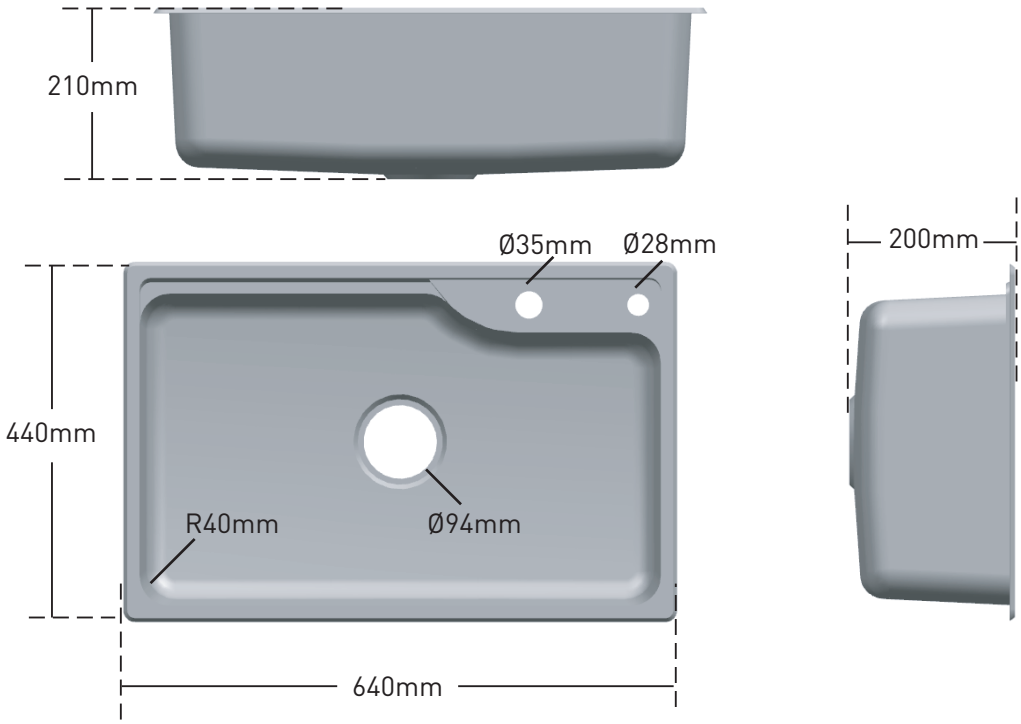

CRITICAL DIMENSIONS DO NOT SCALE

©2022 Moen Incorporated

400-630-8866
www.moen.cn

11/26/2022 SPC23072 500000549935
Rev.Date:04/14