MOEN

Specifications

DESCRIPTION
- Metal construction with a chrome finish
- 1 / 2 IPS connections

OPERATION
- Knob style handle
- Maximum handle rotation angle is 90° to full on for either handle
- Hot side counterclockwise to open(clockwise to close)
- Cold side clockwise to open(counterclockwise to close)
- Includes hot and cold temperature indicators

FLOW
- Flow is limited to 2.2 gpm max(8.3L/min at 0.3mpa)

STANDARD
- Designed to meet GB 18145

WARRANTY
- 5 years limited warranty against leaks and drips

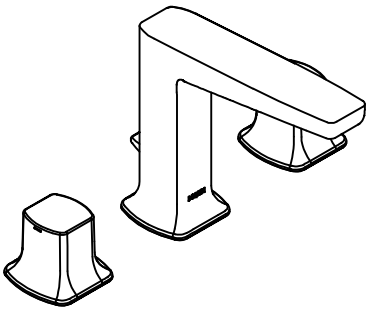

Diamond Two Handle Widespread Lavatory Faucet Trim

Models: T68228

Valve: 9000 , 9000MCL

NOTE : THIS FAUCET IS DESIGNED TO BE INSTALLED THRU 3 HOLES ,29MM MIN.DIA

Units : mm

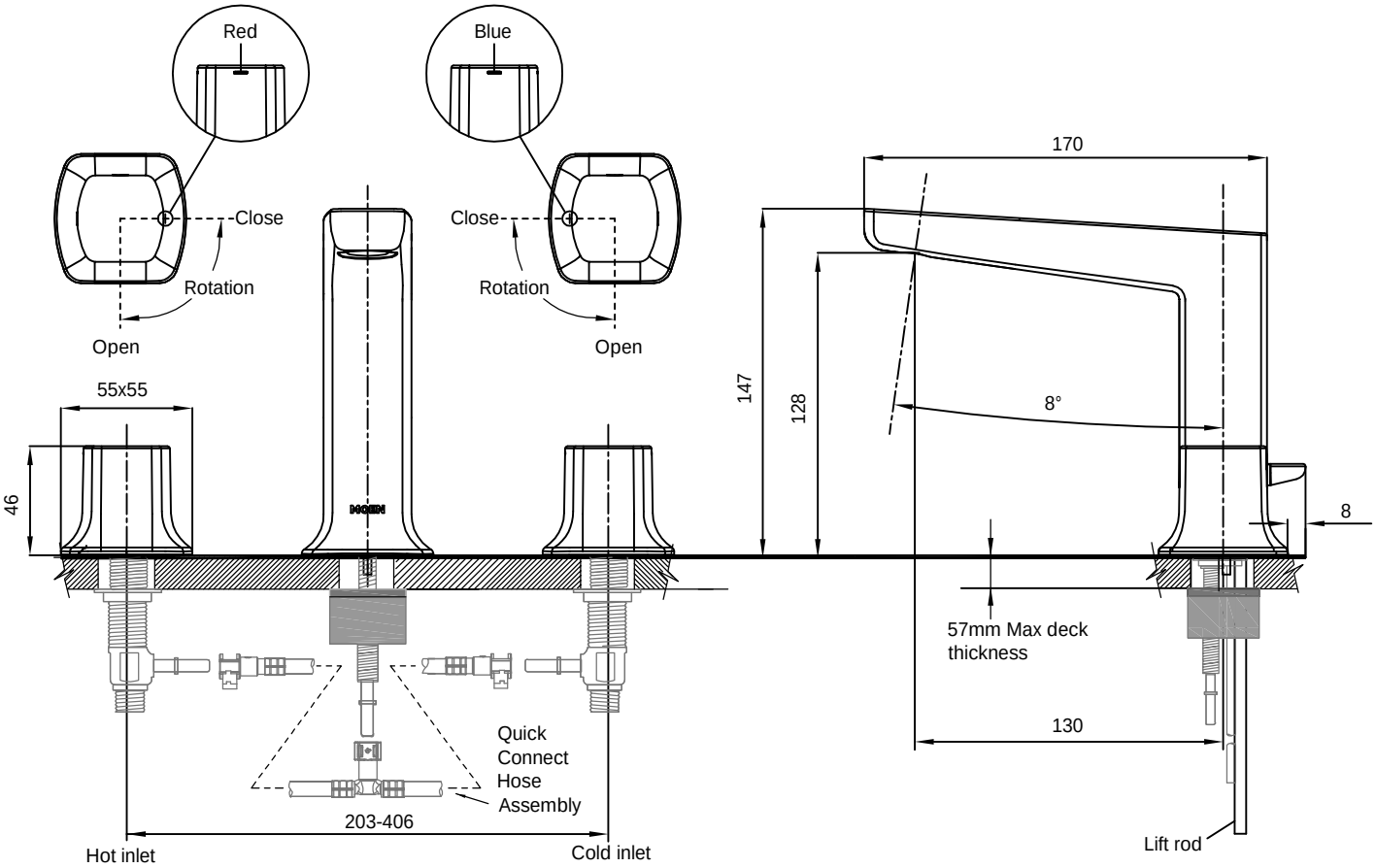

CRITICAL DIMENSION

(DO NOT SCALE)

Rev 01/03/2014